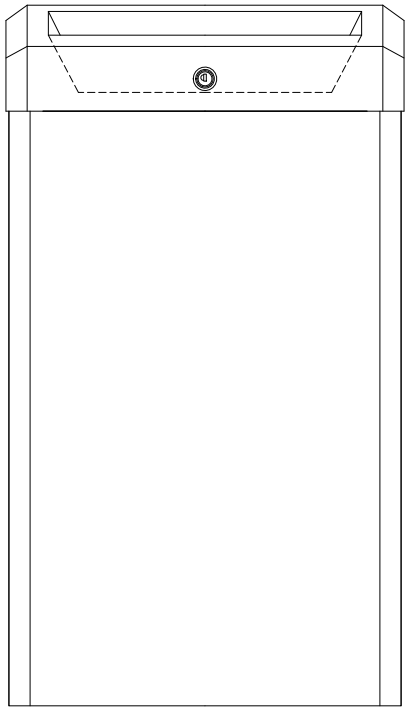

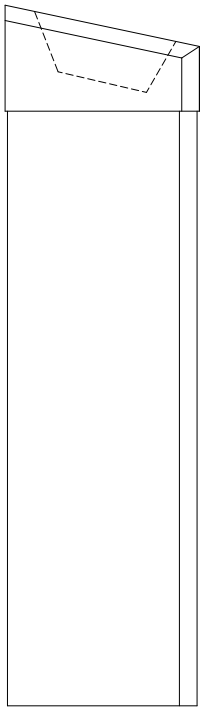

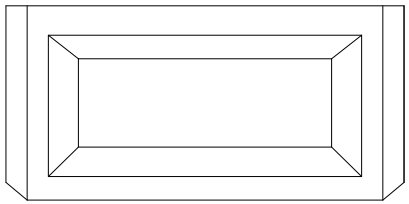

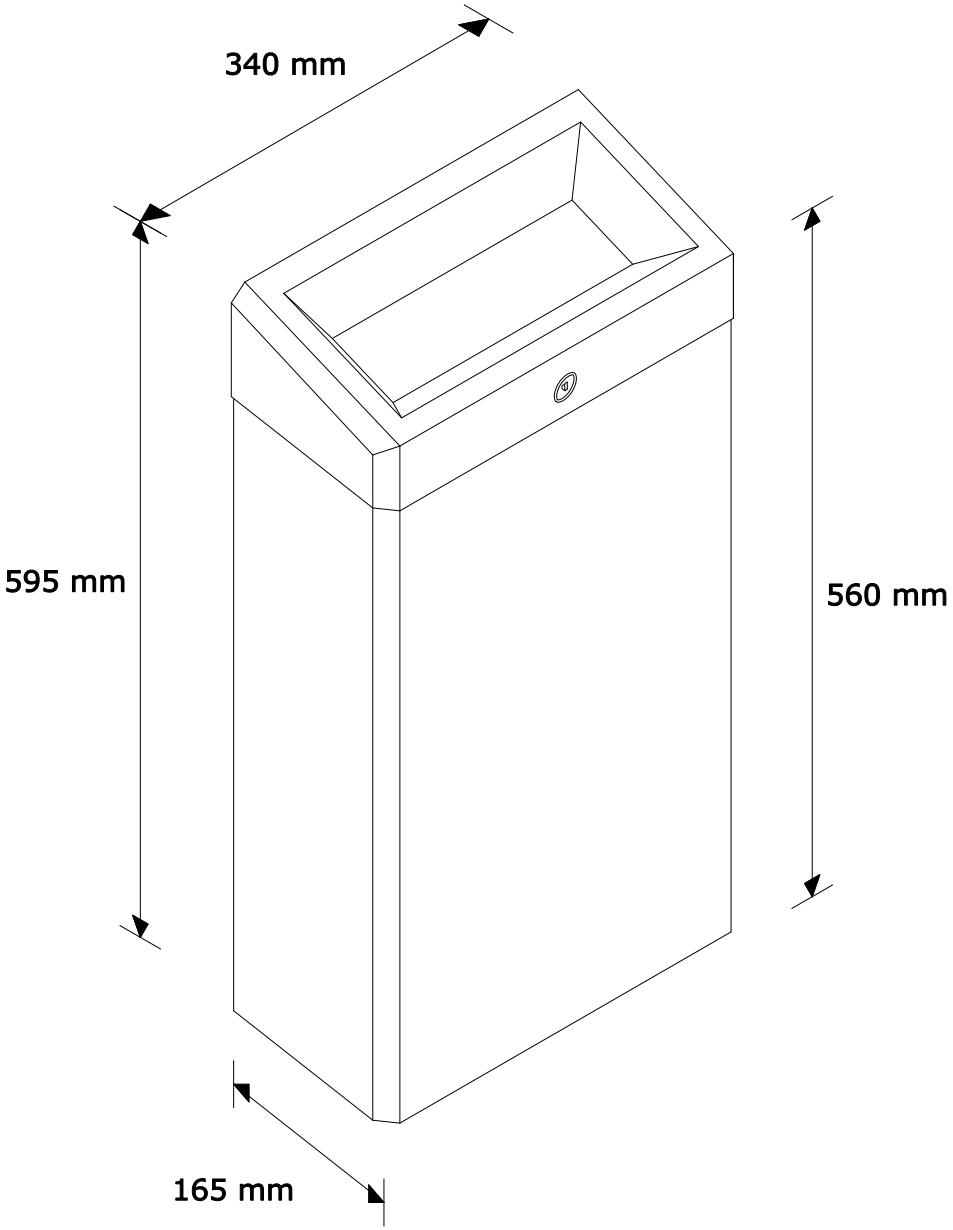
340 mm
595 mm
560 mm
165 mm